PERMIT

CITY OF NAPOLEON - BUILDING DEPARTMENT

255 West Riverview Avenue, Napoleon, Ohio 43545 - 419-592-4010

Permit No. 01644 Issued 10-14-88 (date)

Job Location 643 W. Clinton (address)

Lot 35 Sheffield 2nd Addition (sub-div or legal discript)

Issued By Eldon Huber (building official)

Owner Chris Adams (name) (tel.)

Address 643 W. Clinton

Agent Britenriker Cons. Inc. (builder-eng.-etc.) (tel.)

Address Rt. #1 - Box 78 - Stryker, OH 43557

Description of Use Residence

Residential 1 (no. dwelling units)

Commercial ____ Industrial ____

New ____ Add'n. x Alter ____ Remodel ____

Mixed Occupancy ____

Change of Occupancy ____

Estimated Cost $ 6,857.03

FEES	BASE	PLUS	TOTAL
BUILDING	9.00	42.00	51.00
ELECTRICAL			
PLUMBING			
MECHANICAL			
DEMOLITION			
ZONING			
SIGN			
WATER TAP			
SEWER TAP			
TEMP. ELECT.			

ADDITIONAL PLAN REVIEW: Struct. 4 copies hrs 1.00; Elect. ____ hrs ____

TOTAL FEES..... 52.00

LESS MIN. FEES PAID ____ (date) ____

BALANCE DUE.....

ZONING INFORMATION

district	lot dimensions	area	front yd	side yds	rear yd
B	66' x 165'	10,890	96'	7'-L R-ext.	47'

max hgt	no pkg spaces	no ldg spaces	max cover	petition or appeal req'd	date appr
35'	2 - min.		45%		

WORK INFORMATION:

Size: Length 22' Width 22' Stories 1 Ground Floor Area 484 (Garage)

Height 13' Building Volume (for demo. permit) ____ cu. ft.

Electrical: Apply for separately. (brief description)

Plumbing: N.A. (brief description)

Mechanical: N.A. (brief description)

Sign: N.A. (type) Dimensions ____ Sign Area ____

Additional Information: Unattached garage.

PAID OCT 14 1988 CITY OF NAPOLEON

Date 10-14-88 Applicant Signature Roger T. Shook Bookkeeper (owner-agent)

White-Building Department Yellow-Applicant Pink-Electrical Inspector Green-Clerk-Treasurer Gold-County Auditor

INSPECTION RECORD

	UNDERGROUND			ROUGH-IN						FINAL		
	Type	Date	By	Type	Date	By	Type	Date	By	Type	Date	By
PLUMBING	Building Drains			Drainage, Waste & Vent Piping			Indirect Waste			Drainage, Waste & Vent Piping		
	Water Piping									Backflow Prevention		
	Building Sewer			Water Piping			Condensate Lines			Water Heater		
	Sewer Connection									FINAL APPROVAL		
MECHANICAL	Refrigerant Piping			Refrigerant Piping			Chimney(s)			Grease Exhaust System		
				Duct Furnace(s)			Fire Dampers			Air Cond. Unit(s)		
	Ducts/ Plenums			Ducts/ Plenums			☐ Radiant Htr(s) ☐ Unit Htr(s)			Refrigeration Equipment		
				Duct Insulation			Pool Heater			Furnace(s)		
				Combustion Products Vents			Ventilation ☐ Supply ☐ Exhst.			FINAL APPROVAL		
ELECTRICAL	Conduits & or Cable			Conduits/ Cable			☐ Range ☐ Dryer			Temp Service Temp Lighting		
	Grounding & or Bonding			Rough Wiring			☐ Generator(s) ☐ Motors			Fixtures Lampholders		
	Floor Ducts Raceways			Service Panel Switchboard			☐ Water Htr ☐ Welder			Signs		
	Service Conduit			Busways Ducts			☐ Heaters ☐ Heat Cable			Electric Mtr. Clearance		
	Temporary Power Pole			Subpanels			☐ Duct Htr(s) ☐ Furnace(s)			FINAL APPROVAL		
BUILDING	Location, Set-backs, Esmt(s)	10/20	FH	Exterior Wall Construction	11/9	FH	Roof Covering Roof Drainage	11/9	FH	Smoke Detector		
	Excavation	10/29	FH				Exterior Lath			Demolition (sewer cap)		
	Footings & Reinforcing						☐ Interior Lath ☐ Wallboard					
	Floor Slab			Interior Wall Construction			Fire Wall(s)			Building or Structure		
	Foundation Walls			Columns & Supports			Fireplace Chimney					
	Sub-soil Drain			Crawl Space ☐ Vent ☐ Access			Attic ☒ Vent ☐ Access	11/9	FH			
	Piles			Floor System(s)						FINAL APPROVAL BLDG. DEPT.	12/6	FH
				Roof System			Special Insp Reports Rec'd			Certificate of Occupancy Issued		

ADDITIONAL	INSPECTIONS, CORRECTIONS, ETC.			INSPECTIONS, CORRECTIONS, ETC.		
	PROVIDE RAFTER TIES FOR TWO 2x6 CEIL JOISTS	11/9	FH	DOWN 12/6 FH		
	REPLACE O.H. DOOR HEADER	11/9	FH			

PERMIT

CITY OF NAPOLEON - BUILDING DEPARTMENT

01644 255 West Riverview Avenue, Napoleon, Ohio 43545 - 419-592-4010

Permit No. [redacted] Issued 10-14-88 (date)

Job Location 643 W. CLINTON (address)

Lot 35 SHEFFIELD 2ND ADD (sub-div or legal discript)

Issued By EK (building official)

Owner CHRIS ADAMS (name) (tel)

Address 643 W. CLINTON

Agent BRITENRIKER CONS INC. (builder-eng -etc.) (tel.)

Address R 7 #1 BOX 78 STRYKER OHIO 43557

Description of Use RESIDENCE

Residential 1 (no dwelling units)

Commercial ____ Industrial ____

New ____ Add'n. X Alter ____ Remodel ____

Mixed Occupancy ____

Change of Occupancy ____

Estimated Cost $ 6857.03

FEES	BASE	PLUS	TOTAL
☒ BUILDING	9.00	42.00	51.00
☐ ELECTRICAL			
☐ PLUMBING			
☐ MECHANICAL			
☐ DEMOLITION			
☐ ZONING			
☐ SIGN			
WATER TAP			
SEWER TAP			
TEMP. ELECT.			

ADDITIONAL PLAN REVIEW: Struct. 4-COPIES hrs 1.00; Elect. ____ hrs ____

TOTAL FEES 52.00

LESS MIN. FEES PAID ____ (date) ____

BALANCE DUE .....

ZONING INFORMATION

district	lot dimensions	area	front yd	side yds	rear yd
B	66' x 165'	10,890	96'	7'-6" - L R-EXIST.	47'

max hgt	no pkg spaces	no ldg spaces	max cover	petition or appeal req'd	date appr
35'	2-MIN		45%		

WORK INFORMATION:

Size: Length 22' Width 22' Stories 1 Ground Floor Area (GARAGE) 484

Height 13' Building Volume (for demo. permit) ____ cu. ft.

Electrical: APPLY FOR SEPERATELY (brief description)

Plumbing: NA (brief description)

Mechanical: NA (brief description)

Sign: NA (type) Dimensions ____ Sign Area ____

Additional Information: UNATTACHED GARAGE

Date ____ Applicant Signature ____ (owner-agent)

White-Building Department Yellow-Applicant Pink-Electrical Inspector Green-Clerk-Treasurer Gold-County Auditor

CITY OF NAPOLEON
BUILDING INSPECTION DEPARTMENT
APPLICATION FOR BUILDING PERMIT
(Please print or type)

The undersigned hereby makes application for construction, installation, or alteration work as herein specified, agreeing to do all such work in strict accordance with the City of Napoleon's adopted Building Codes.

Location of project 643 West Clinton St. Napoleon Cost of project ($ 6,857.03)

Owner's Name Mr. Chris Adams Address 643 W. Clinton St. Napoleon

Contractor Britenriker Construction Inc. Telephone No. 1-419-267-3850

Address Rt. #1 Box 78, Stryker, Ohio 43557

Lot Information: (Not required for siding job)

Lot No. #35 Subdivision Sheffield 2nd Addition

Zoning District B. Resident Lot Size 66 ft. X 165 ft. Area 10890 sq. ft.

Setbacks: Front 96 Ft. Right Side 7 Ft. Left Side 37 Ft. Rear 47 Ft.

Work Information:

Residential X Commercial ____ Industrial ____

New Construction X Addition ____ Remodel ____

Accessory Building X Siding Vinyl (Specific Type)

Brief Description of Work: A 22'x22' garage with a concrete floor, & a 16x7 Overhead door and a 3' x 6'8" Walk in door

Size: Length 22Ft. Width 22Ft. No. of Stories One

Area: 1st Floor 484 sq. ft. Basement ____ sq. ft.

2nd Floor ____ sq. ft. Accessory Bldg. ____ sq. ft.

3rd Floor ____ sq. ft. Other ____ sq. ft.

Additional Information: ____

PERMIT NO. 01648

PERMIT FEE $ 51.00

APPLICATION FOR PERMIT SHALL BE ACCOMPANIED BY TWO COMPLETE SETS OF PLANS INCLUDING: ELEVATIONS, FLOOR PLANS, CROSS SECTIONS AND PLOT PLAN. IF ADDITION OR REMODELING, SHOW ALL EXISTING STRUCTURES AND THEIR SIZE AND LOCATION. ALL PLANS SHALL BE DRAWN TO SCALE.

Date 9-29-88 Applicant's Signature Mike Britenriker

BRYAN ENGINEERING & SURVEYING

Tony Hoeffel, P.E., P.S.

Office 1-(419) 636-2060
Home 1-(419) 636-3987

128 S. Lynn St.
Bryan, Ohio 43506

November 11, 1988

City of Napoleon
ATTN: Eldon Hueber
225 Riverview Avenue
Napoleon, Ohio 43545

RE: Chris Adam's Garage
Britenriker Construction
Napoleon, Ohio

Dear Mr. Hueber:

Enclosed, please find the beam calculations for the above referenced. A 3/8" steel plat, 16' x 11" will be required to be bolted to the side of the 2 - 2" x 12" header to handle the design loading.

I hope this will be sufficient information to allow Britenriker Construction to complete the garage. If you have any questions, please advise.

Sincerely,

Anthony H. Hoeffel, P.E., P.S.

Enclosure

AHH/amd

CHRIS ADAMS
643 W CLINTON ST
BRITENRIKER CONST.

11/10/88

LOADING

20
10
20
10
60 #/SF x 11 = 660 #/LF
WOOD BEAM 4"x11 12 #/LF
3/8" PLATE 13 #
685 #/LF

MOMENT

685 #/LF

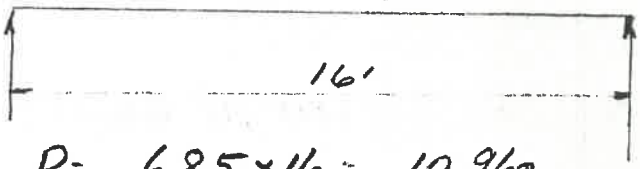

P = 685 x 16 = 10,960

R = 685 x 8 = 5,480 #

M = 5,480 x 8 x 1/2 = 21,920 ft-lbs

21,920 x 12 = 263,040 in-lbs

WOOD 2-2x12 = 2 x 31.6 x 1400 psi = 88,480 in-lbs
WOOD 1-1/2x12 = 10.5 x 1400 = 14,700 in-lbs
STEEL 3/8" x 11"
$S = \frac{bh^2}{6} = 7.56$ 7.56 22,000 166,320 in-lbs

TOTAL 269,500 in-lbs > 263,040 ∴ OK

DEFLECTION

STEEL
$I = \frac{bh^3}{12} = \frac{0.375(11)^3}{12} = 41.6$

WOOD
$I = \frac{bh^3}{12} = \frac{3.5 \times (11.25)^3}{12} = 415$

$\Delta = \frac{5(10{,}960)(16 \times 12)^3}{384 \times (29{,}000{,}000 \times 41.6 + 415 \times 1{,}760{,}000)}$

= 0.52 IN

Δ Allowable = L/240 = $\frac{16 \times 12}{240}$ = 0.80 IN

0.80 > 0.52 ∴ OK

STATE OF OHIO
ANTHONY H. HOFFEL
E-37350
REGISTERED PROFESSIONAL ENGINEER

TRUSSES V010

RAL NOTES:

plates shown are 20 gauge ILS plates, unless otherwise noted. Plates to be applied on th faces of each joint and centered, unless plate position is dimensioned.
ovide continuous lateral bracing to bottom chord at maximum intervals of 10'-0".
sign is based substantially on current applicable standards of T.P.I. and N.D.S. at the date drawing.
Denotes continuous lateral bracing in addition to that described in General les 2.
ovide continuous lateral support of top chord by means of plywood sheathing or properly aced purlins.

DESCRIPTION: WACHTMAN 2		DATE: 6/12/07	
SPAN: 24'-0"	DRAWING NO.: 33085	SHT. 9 OF 15	
PITCH/DEPTH: 4/12			
DRAWN BY: MRS	ENG. BY: JWN	CHECKED BY: JFR	

ATTENTION: Erection, Handling, Safety Precautions, Temporary or Permanent Bracing of trusses are not the responsibility of the Truss Designer, Metal Connector Plate Manufacturer, or the Truss Manufacturer and therefore are not a part of these engineering drawings. Trusses are designed as individual components. All lateral bracing specified on these truss drawings are intended to provide lateral restraint for individual truss members only. The design, amount and proper installation of temporary or permanent bracing for whatever reason is the sole responsibility of the designer or builder of the complete structure. Adequate Bracing is Always Required. Competent professional advice should always be obtained relative to truss bracing and erection requirements.

IMPORTANT: READ ALL NOTES ON THIS DRAWING

Uniform Loading

Top Live:	25.0
Top Dead:	10.0
Bot Live:	10.0
Bot Dead:	10.0
Spacing ("O.C.):	24.0
Duration Factor:	1.15
Number of Plies:	1

* Plates *		* Dimensions *	* Splice Plate *
1) 3.0 x 6.0	5) 3.0 x 4.0	a) 24- 0- 0	
2) 3.0 x 2.0	6) 3.0 x 2.0	b) 4- 3-15	(3.5) 3x6 206A
3) 3.0 x 4.0	7) 3.0 x 6.0		
4) 4.0 x 4.0			

LEFT HEEL HT. 3 -15
RIGHT HEEL HT. 3 -15

Reaction At 1: 1320
Reaction At 7: 1320

CHORDS A	2x4 So. Pine KD 15	No. 2
CHORDS B	2x4 So. Pine KD 15	No. 2 Dense
WEBS	2x4 So. Pine KD 15	No. 3

STATE OF OHIO
JAMES N. BONDOR
24293
REGISTERED
PROFESSIONAL ENGINEER

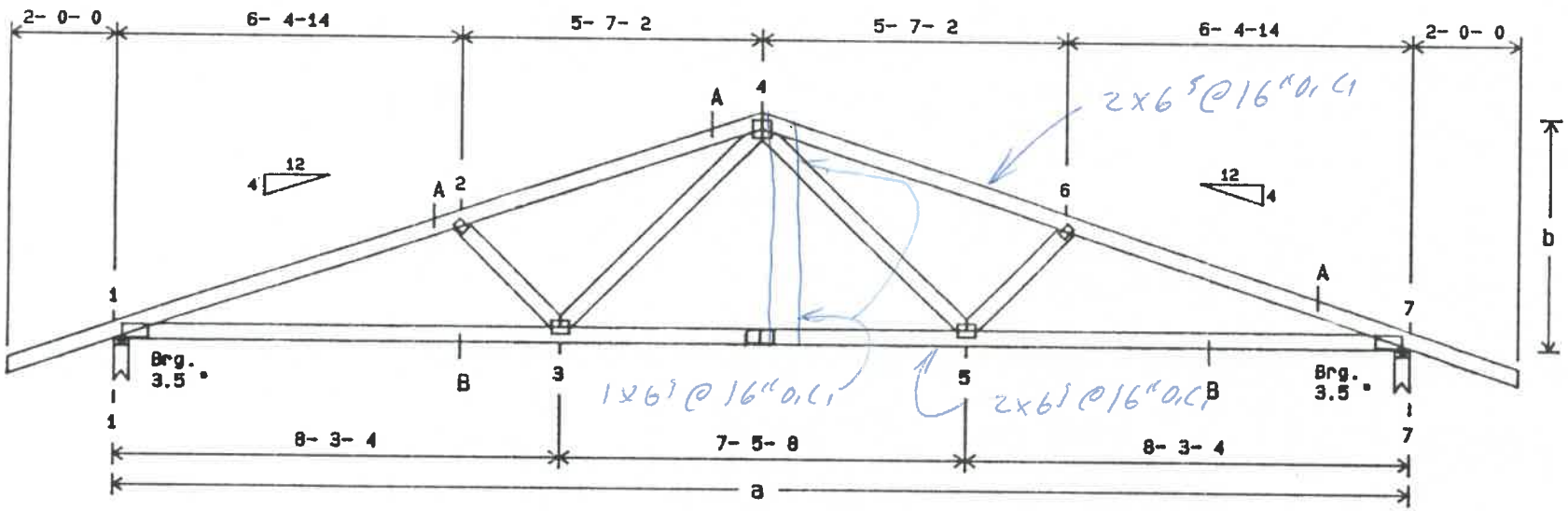

USE for 22'-0" Span

Total Span = 24ft 0in 0/16
Total Height = 4ft 3in 15/16
301 ID = W241
APPROX. WGT. EACH PLY 111 lbs.